Direct Access Networks: A Paradigm for Robust Dynamic Extensibility

Prof. Steven S. Lumetta

(joint work with Prof. Muriel Medard)

University of Illinois at Urbana-Champaign

Dept. of Electrical and Computer Engineering

Coordinated Science Laboratory

Direct Access Networks: A Playground for Adaptive Computation

Prof. Steven S. Lumetta

(joint work with Prof. Muriel Medard)

University of Illinois at Urbana-Champaign

Dept. of Electrical and Computer Engineering

Coordinated Science Laboratory

Outline

- direct access networks
- challenges
  - link recovery
  - dynamic extensibility
  - dynamic capacity
- methodology for study
- combine mobility and services
- conclusions

Extending Network Infrastructure

- connectivity demands
  - rapid growth
  - unpredictable
  - incremental
- ad-hoc infrastructure extensions
  - aggregation
  - hierarchical organization
  - periodic overhauls

Aggregation and Overhauls

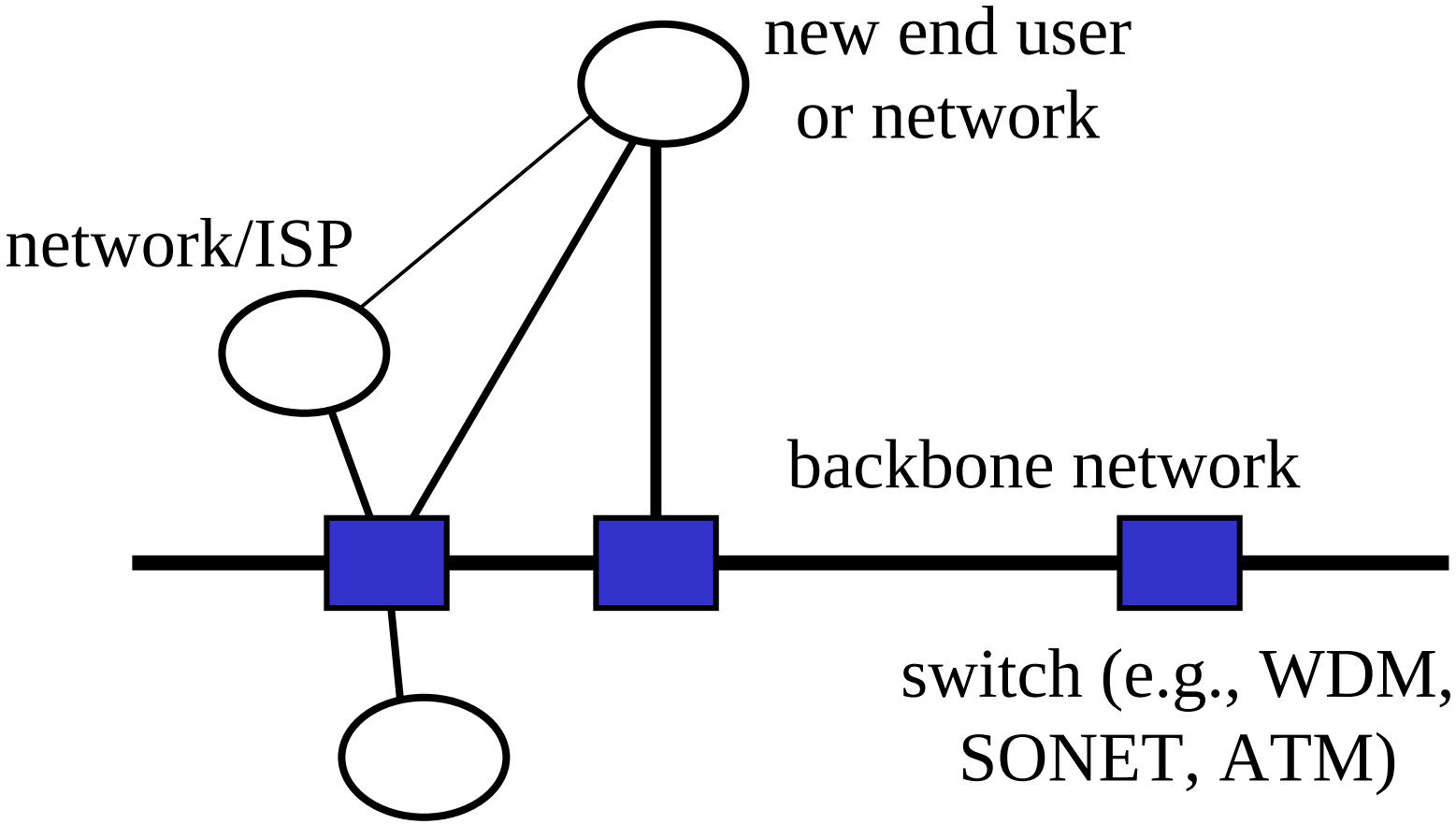

Aggregation and Hierarchy

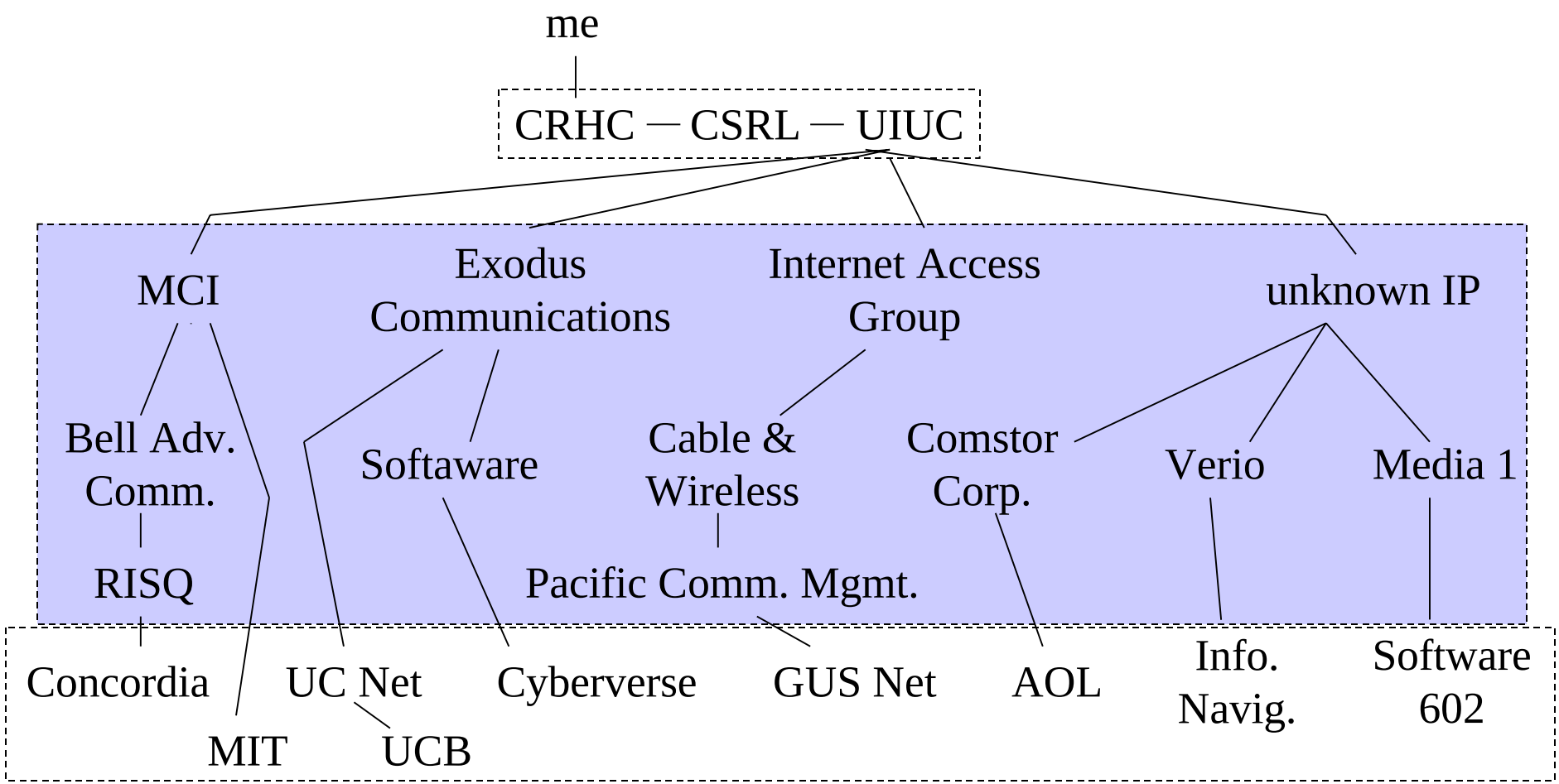

Growth by Direct Access

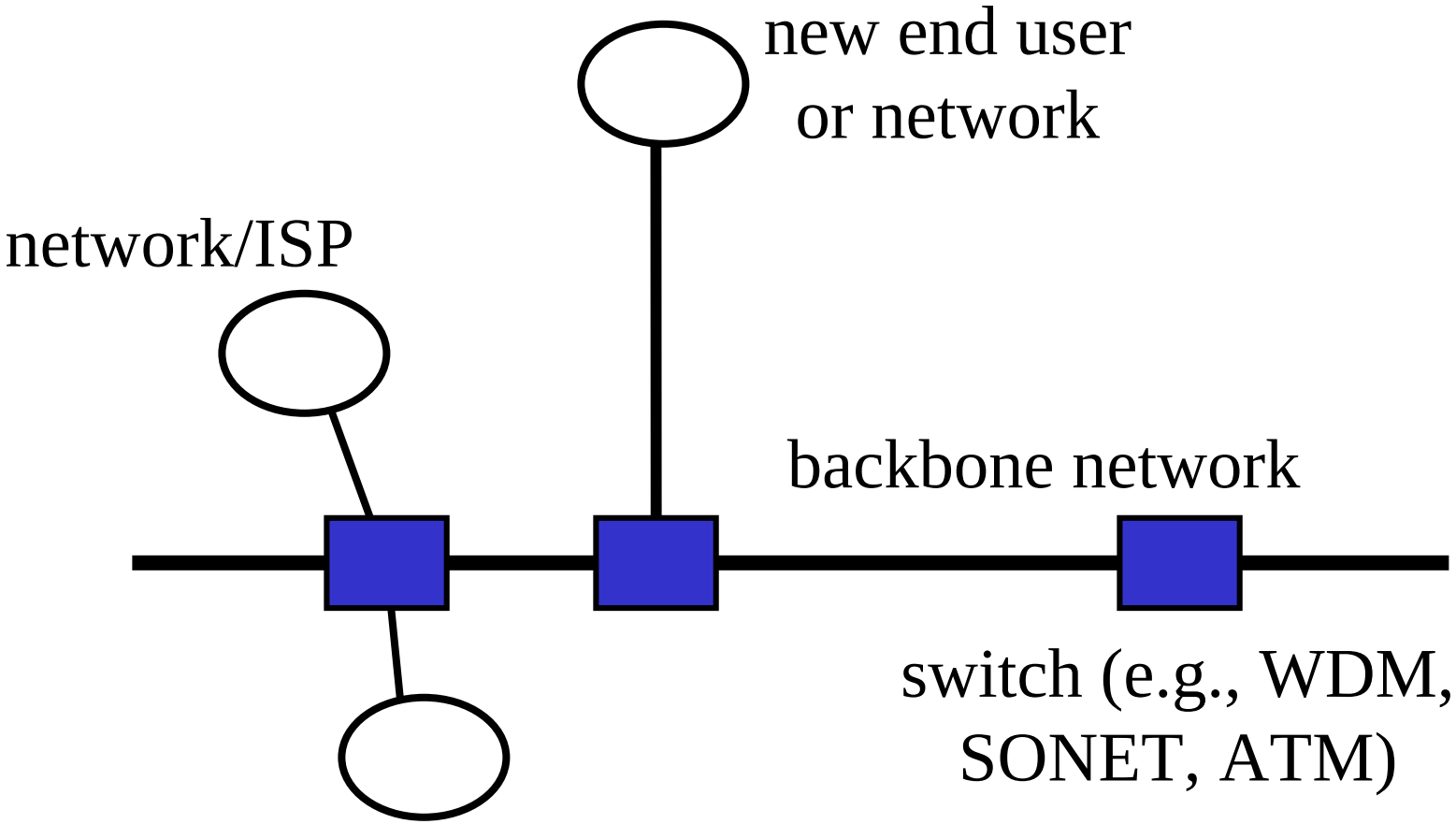

Just Add Switches?

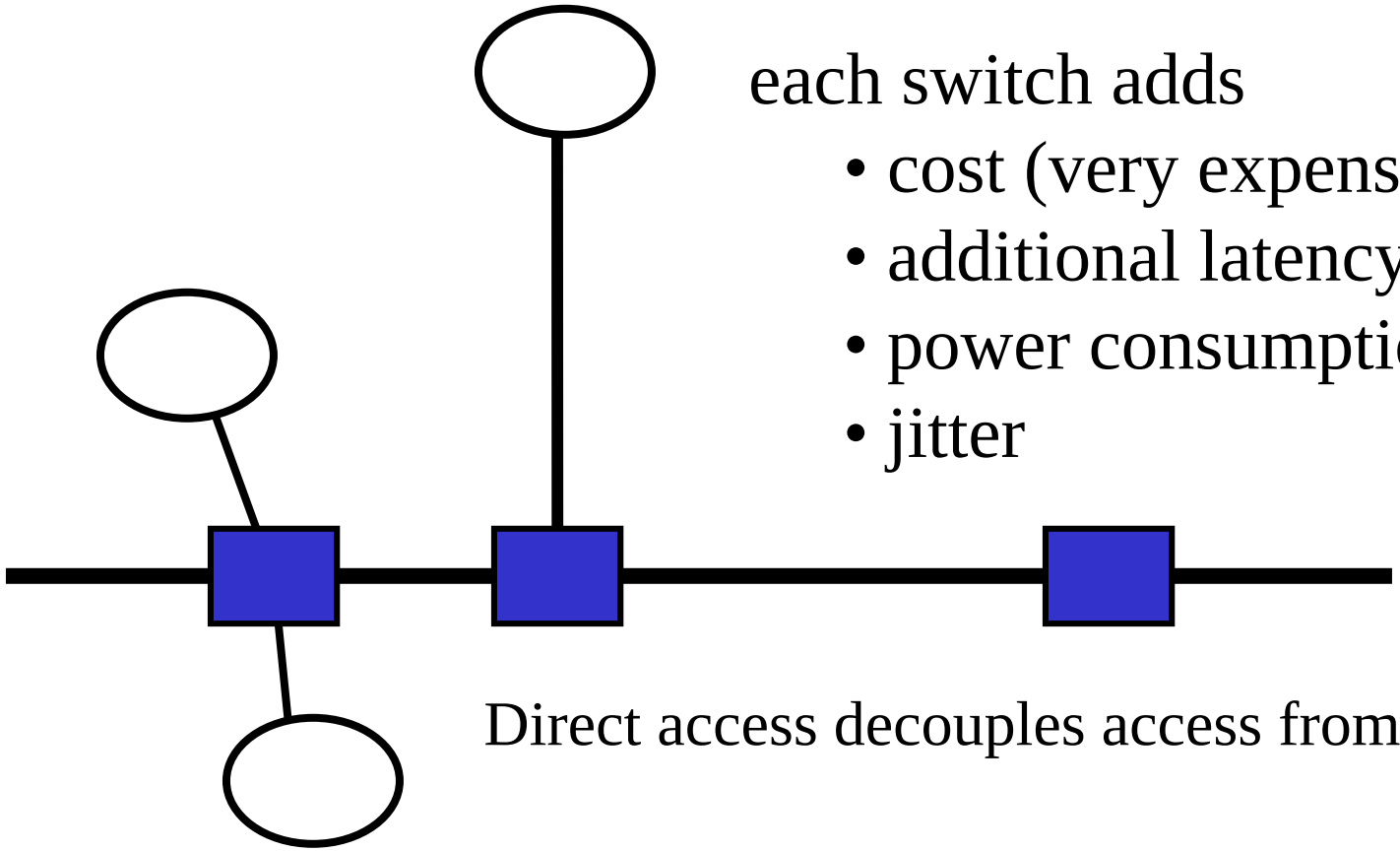

each switch adds

- cost (very expensive)
- additional latency
- power consumption
- jitter

Direct access decouples access from routing.

Direct Access Components

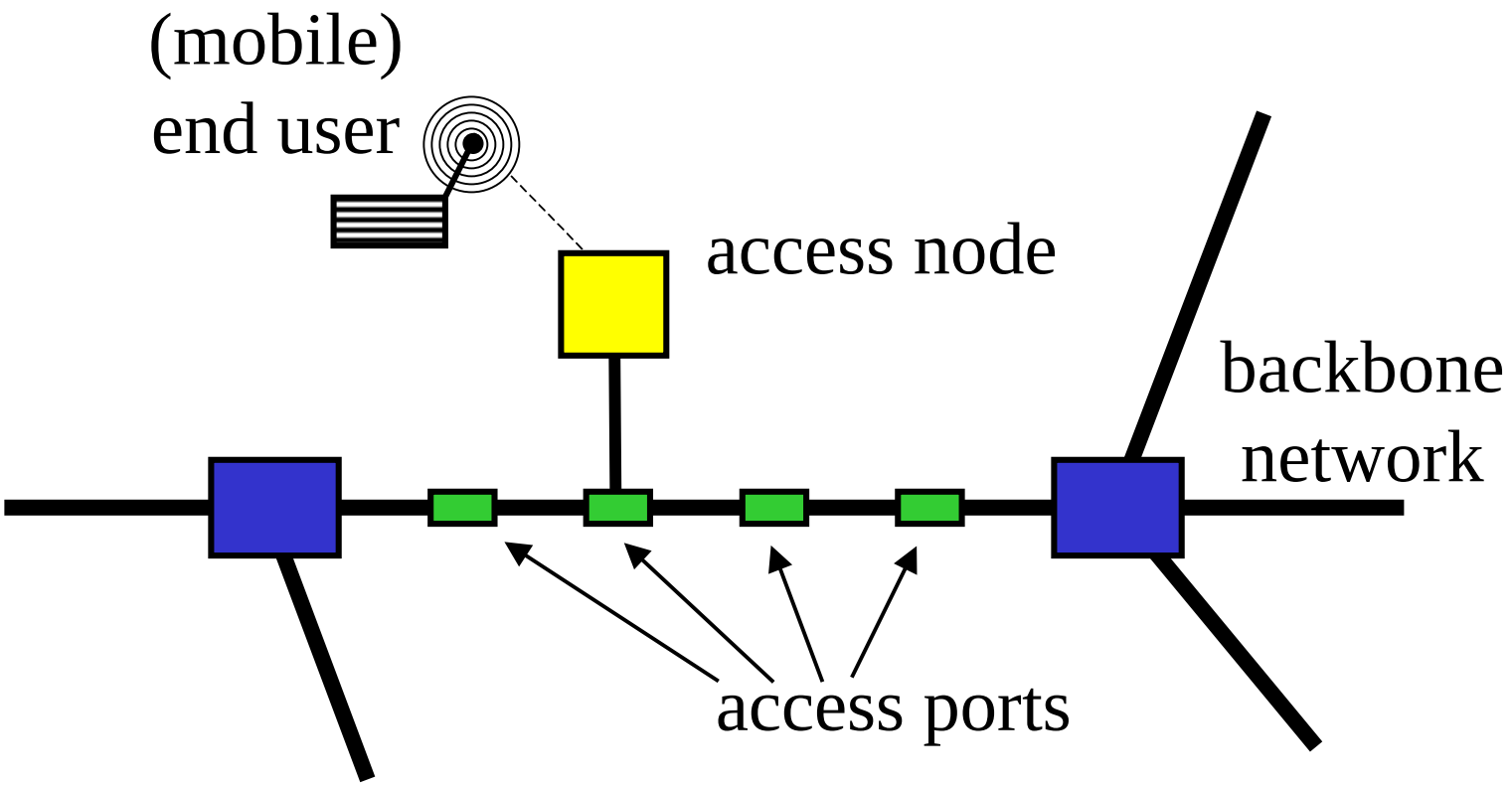

Characteristics of Switches and Access Ports

- owned by regulated industry
- provide reliable connectivity
- control available bandwidth
- switches
  - expensive
  - installed to meet routing needs
- access ports
  - inexpensive
  - available for lease/rent
  - variable backup options

Access Node and End User Characteristics

- federated ownership (ISP's/individuals)
- access nodes
  - scalable multiprocessor
  - provide home/proxy computation
  - negotiate bandwidth
  - support base stations for mobile users
- end users
  - possibly mobile
  - variable bandwidth demands
  - variable computation demands

Advantages of Direct Access

- contrast with alternatives
  - uses existing infrastructure
  - fewer owners/operators along path
  - inexpensive to implement
- new capabilities
  - dynamic extensibility
  - dynamic capacity (bandwidth)

Dynamic Extensibility Example

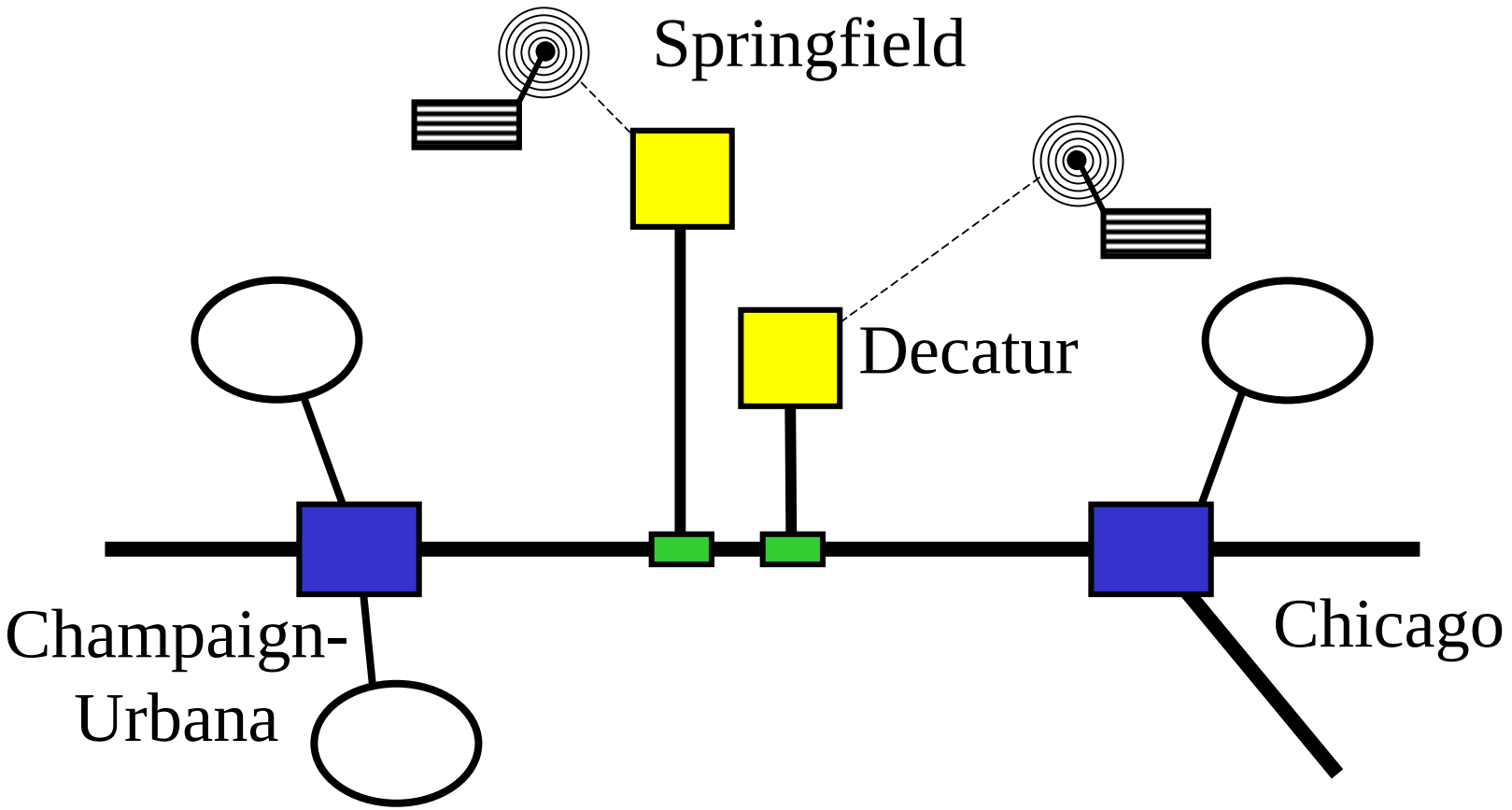

Dynamic Extensibility Example

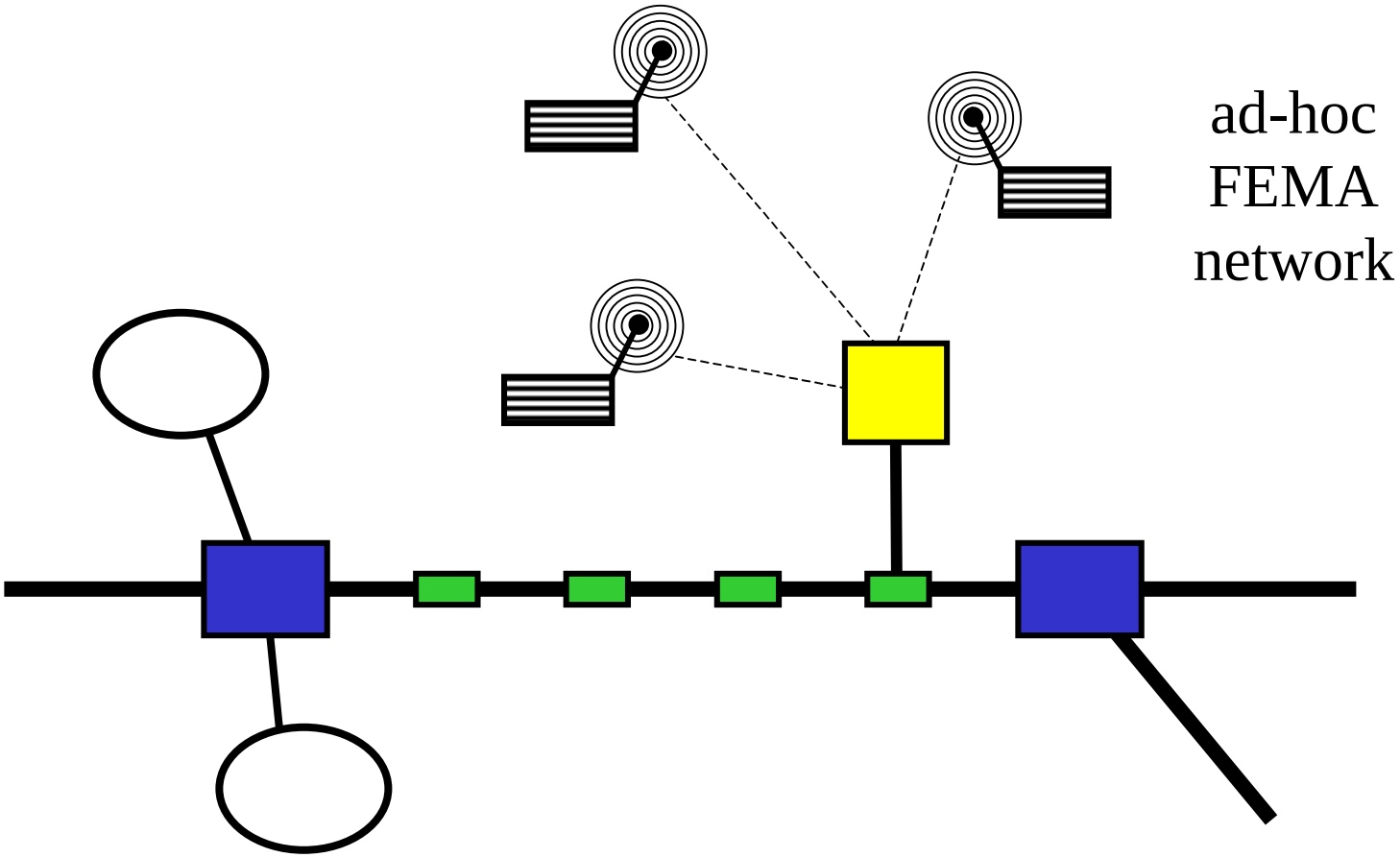

Dynamic Extensibility Example

nomadic computing

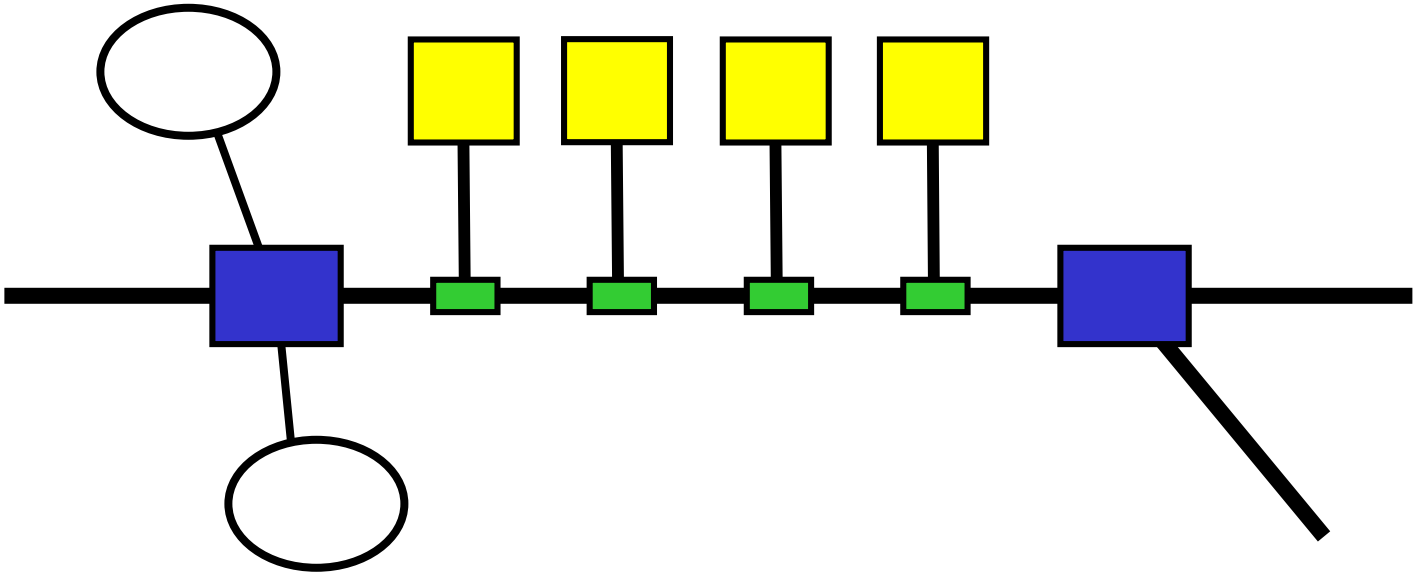

Dynamic Capacity Examples

- conference hotel
  - week 1: philosophers
  - week 2: ACM SIG
  - week 3: W3 Net Surfers' Club
- NASA
  - supernova catalog
  - shuttle mission video broadcasts
  - first film from surface of Titan

Outline

- direct access networks
- challenges
  - link recovery
  - dynamic extensibility
  - dynamic capacity
- methodology for study
- combine mobility and services
- conclusions

Recovery of Physical Links

- desired properties
  - localized (distributed decisions)
  - dynamic, available rather than reserved
  - support general topology
  - avoid duplicated effort
- approaches
  - self-healing rings
  - loopback restoration

Self-Healing Rings

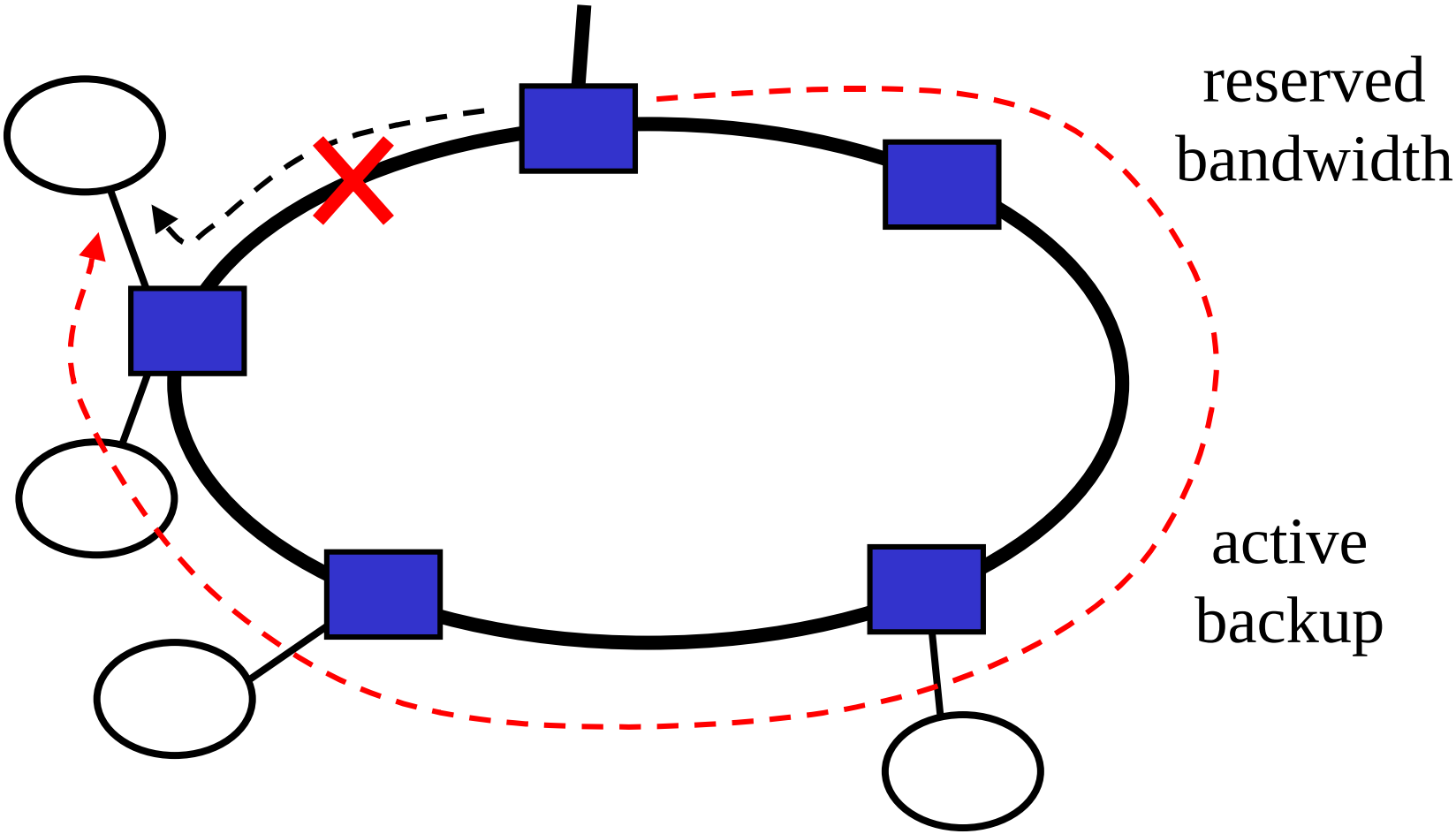

Loopback Restoration

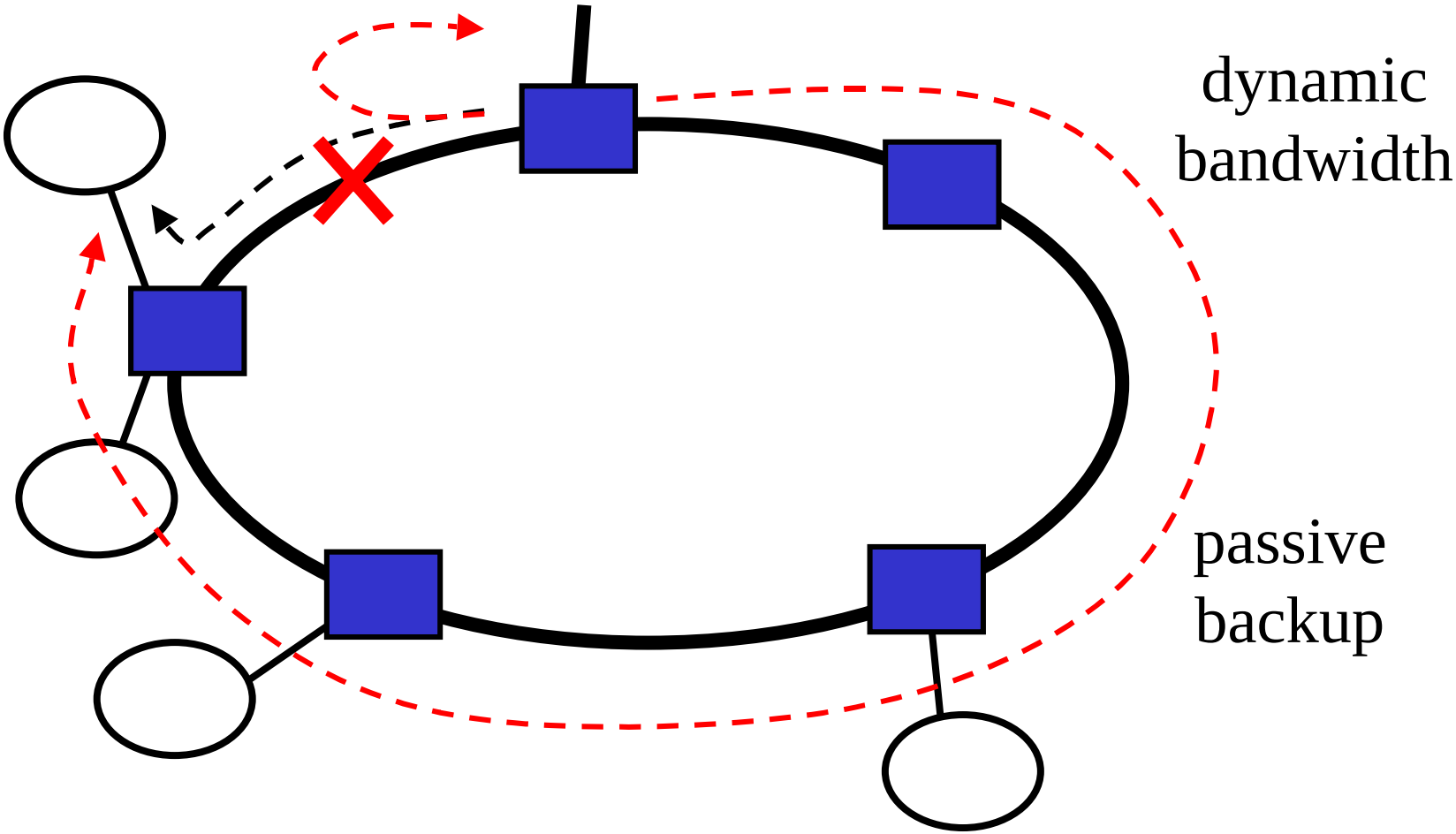

Advantages of Loopback Restoration

- more general topology
  - dual-path mesh (vs. ring coverage)
  - arbitrary topology with backup priorities
- dynamic exploration
  - uses available bandwidth
  - no active backup
  - finds any possible backup path
- no recovery reorganization for new switches

Loopback with Direct Access

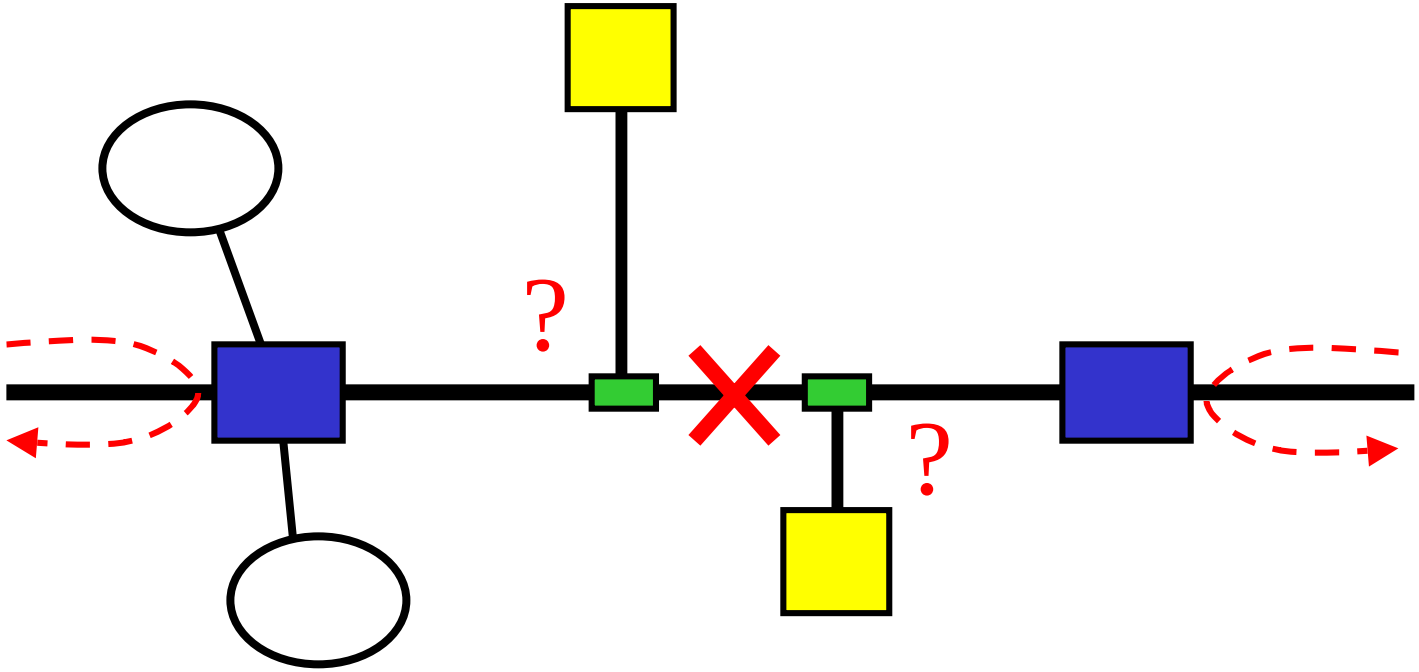

Loopback Solution

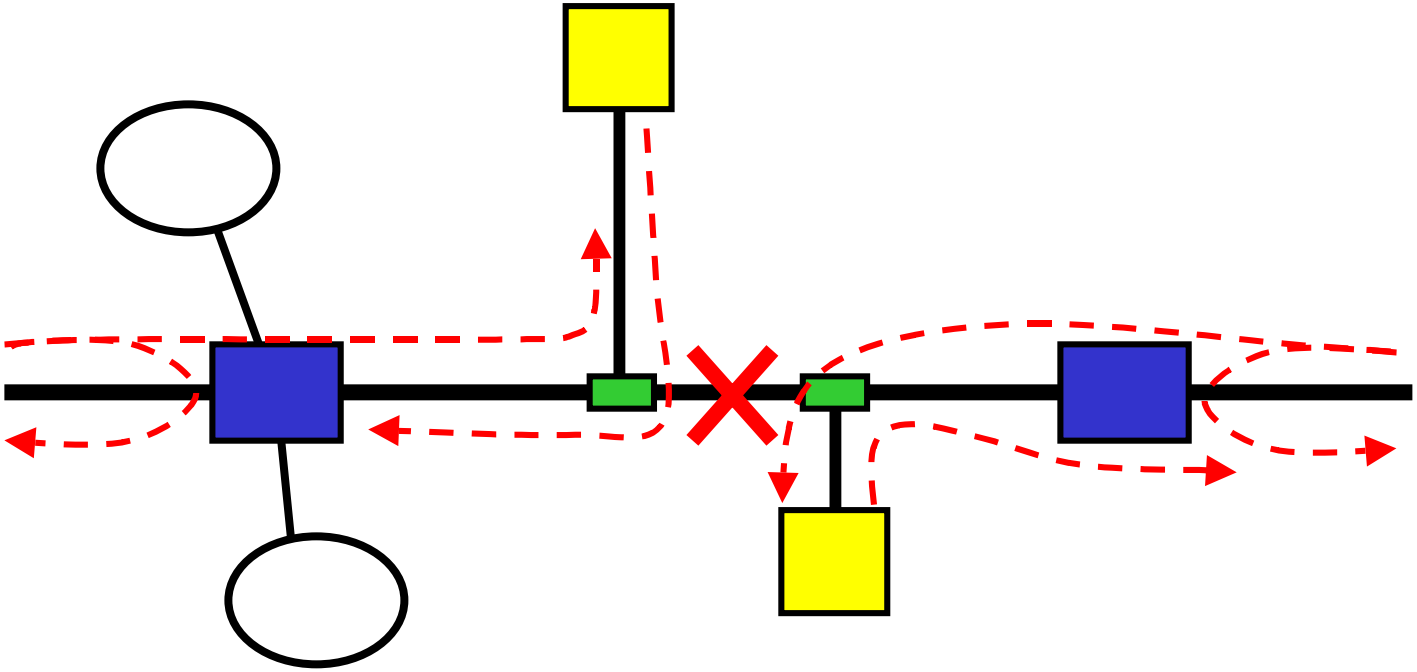

Problems for Recovery Implementation

- fault detection and localization
- real-time backup path exploration
- distributed recovery scheme
  - switches and access ports
  - support for dynamic extensibility/capacity
  - involve access nodes in recovery?

Problems for Dynamic Extensibility

- access port setup
  - node-owner/billing identification
  - access negotiations
  - automated?
- access node routing
  - may not have home node
  - faster than wired name propagation?

Problems for Dynamic Capacity

- arbitration of bandwidth
  - involve only one link (switches and access nodes)
  - switches direct access port control
  - pricing scheme?

Outline

- direct access networks
- challenges
  - link recovery
  - dynamic extensibility
  - dynamic capacity
- methodology for study
- combine mobility and services
- conclusions

Methodology for Study

- simulation of wireless connections
  - simpler than real hardware
  - measure effect of improvement
- emulation of TDM direct access network
  - Myrinet-based
  - using active control (an SMP)

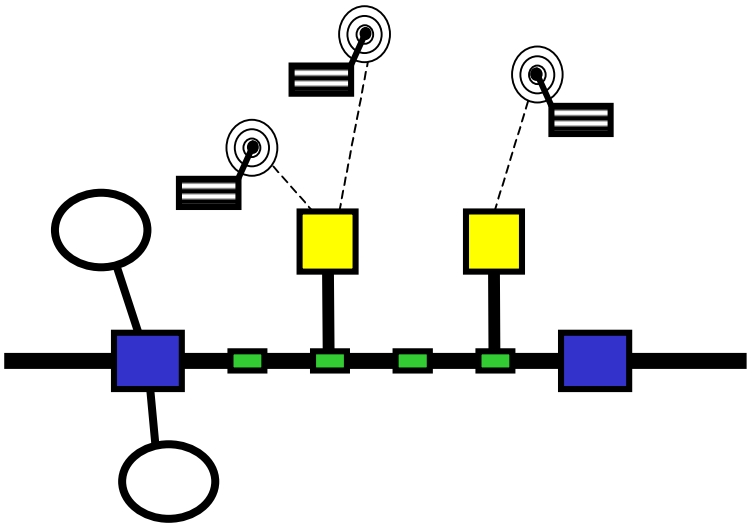

Myrinet-Based Emulation

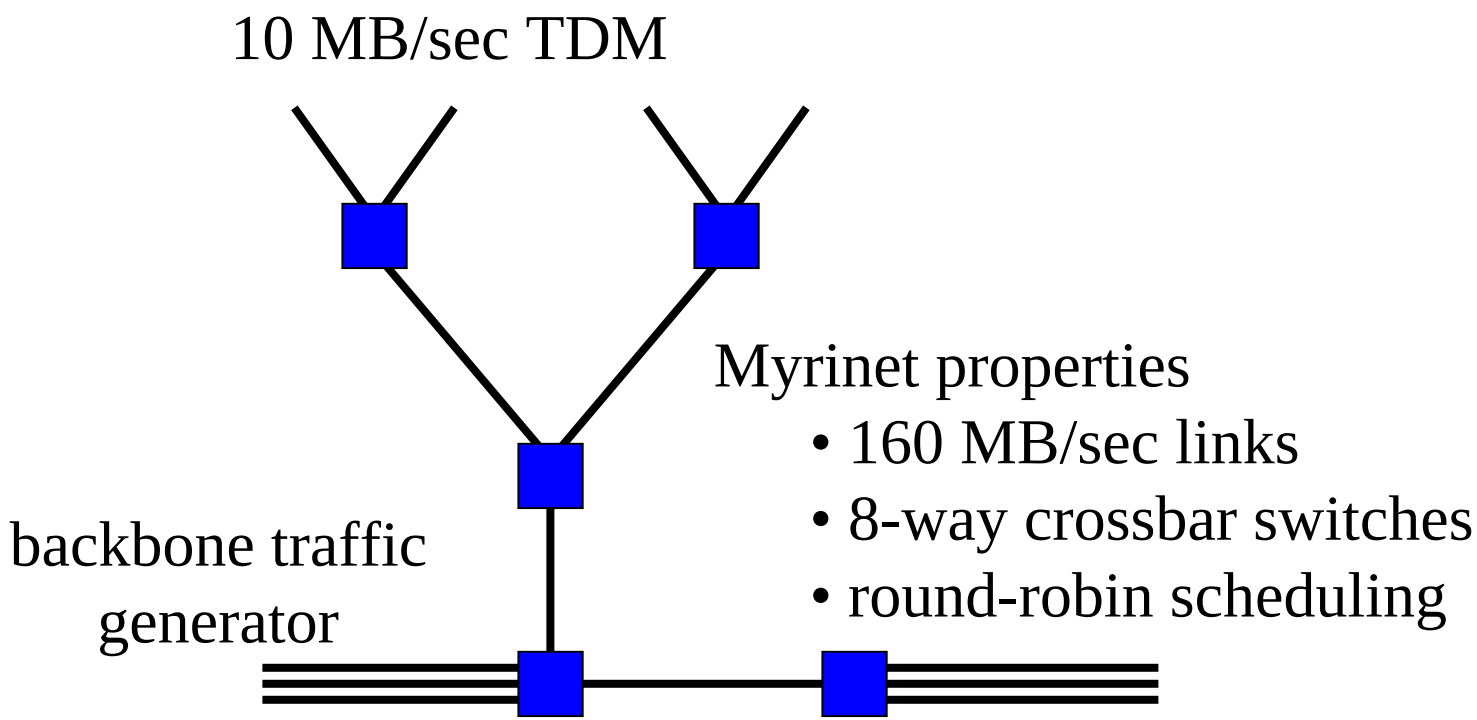

Myrinet properties

- 160 MB/sec links
- 8-way crossbar switches
- round-robin scheduling

Opportunities with Direct Access

- seamless mobile access
  - connection handoff (cellular, etc.)
  - name propagation/data forwarding
  - disconnected filesystems (MFAS)
- scalable internet services
  - image distillation (TranSend)
  - prefetching (Smart WWW Proxy)
  - formatting (Wingman)
  - scalable network service architecture (TACC)

Fun Problems

- connectivity
  - suspend and reinitiate
  - buffer data streams
  - control data management strategy
- manage computation
  - home node or proxy
  - trade computation for bandwidth
  - allocate computation resources
  - store results where
- advertise mobile services
- broadcast commonly requested data

Conclusions

- direct access networks
  - decouples access from routing
  - reduces depth of hierarchy
- enables
  - dynamic extensibility
  - dynamic capacity
- problems
  - recovery
  - managing adaptation