**ECE 120: Introduction to Computing** **Spring 2019 ZJUI**

## Lab 4 Information: Debouncing Circuit

The incredible speed of TTL causes some interesting problems when interfacing circuits to the slow world around them. For example, when a mechanical switch is closed, the electrical contacts inside the switch are violently slammed together. The force of the impact of the two contacts is often sufficient to cause the contacts to separate momentarily, and then come together. The momentary separation of the electrical contacts is called a **contact bounce**. When a switch is flipped, the contacts may bounce several times before finally coming to rest. The contacts will be stable within milliseconds of first contact: essentially zero time to the human observer, but a long period for a TTL circuit. If a switch is used to clock a counter circuit, the counter may advance several times per flip of the switch.

**Debouncer**

The **debouncer** circuit shown below eliminates problems caused by switch contact bounce by insuring a clean transition from a logic zero to logic one (or logic one to logic zero) when the switch is thrown. You are welcome to spend a minute and analyse its work to understand why and how it debounces the switch. Or you can just wait two years for ECE 385...

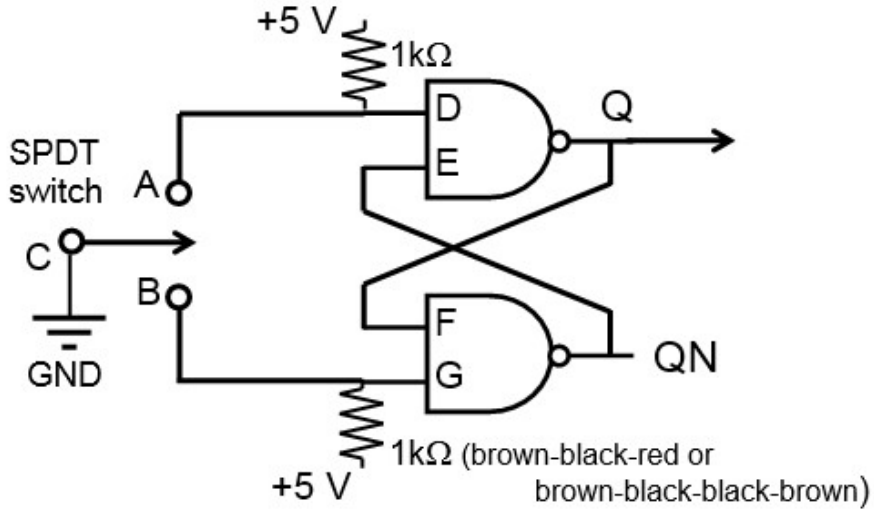


Note the use of the pull-up resistors in the debouncer circuit. When the switch is in position 'A,' the input 'D' of the first NAND gate is tied directly to ground (a logic 0). With the switch in position 'B,' NAND gate input 'D' is not connected to ground, but is pulled to a logic 1 by the pull-up resistor. Without the pull-up resistor, input 'D' would be left floating (unconnected) when the switch is in position 'B.' REMEMBER - All inputs must be held at some logic level!